IN-WALL MINIMAL MIXER BODY

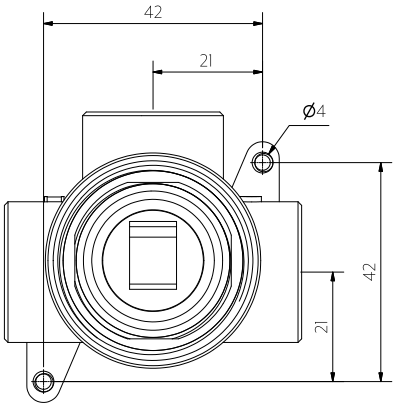

Front View

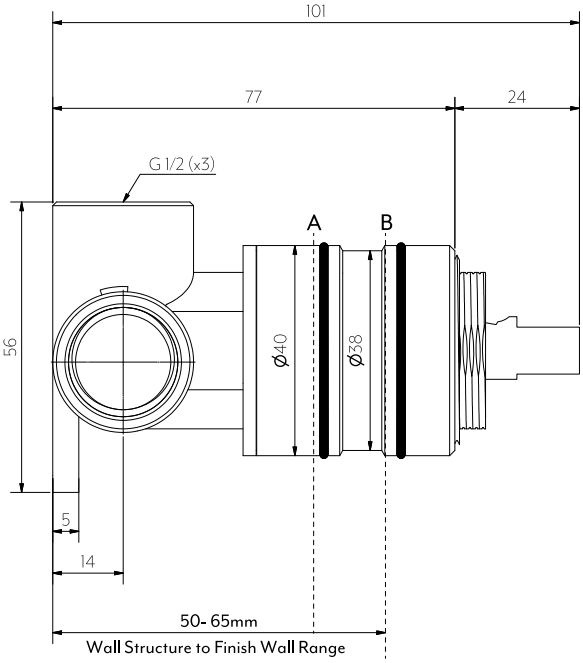

Side View

DISCLAIMER: To achieve infiniti (interchangeable sleeves) finish wall must fall between point A and B. Please ensure waterproofing is set back from finish wall and does not obstruct sleeves.

Note: Dimensions are nominal measurements only

SPECIFICATIONS

RECOMMENDED USE	Domestic
MATERIAL	Solid Brass
TEMPERATURE RATING	Maximum continuous working temperature 75°C If the water temperature exceeds 75°C,an approved tempering valve must be fitted
PRESSURE RATING	Recommended minimum working pressure 0.5 Bar Recommended maximum working pressure 5 Bar Hot and cold water inlet pressure should be equal

Disclaimer: Products in this manual must by law be installed by licensed and registered tradespeople in accordance with the relevant standards. ABI and the manufacturer/distributor reserve the right to vary specifications or delete models from their range without prior notification. Dimensions are nominal measurements only. The information listed is correct at the time of publication, however ABI and the manufacturer/distributor takes no responsibility for printing errors. Copyright © ABI Interiors 2024 Pty Ltd

INSTALLATION GUIDE

Note: This product must be installed by a licensed plumber. This is a general installation guide - there are many factors involved that can alter the installation method. **AU/NZ:** For installations within Australia and New Zealand, this product must be installed in compliance with AS/NZS 3500. **UK:** For installations in the United Kingdom this product must be installed in compliance with the Water Supply (Water Fittings) Regulations and Water Supply (Water Fittings) (Scotland) Byelaws. **Other:** For installations outside these countries, this product must be installed in compliance with the standards in your respective country.

ROUGH IN

See Specification image for finish wall setback

1. Screw in-wall body into wall structure with provided screws.

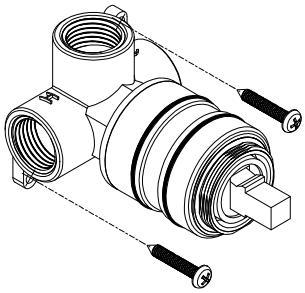

2. Connect hot, cold and mixed lines. TEST AND CHECK FOR LEAKS.

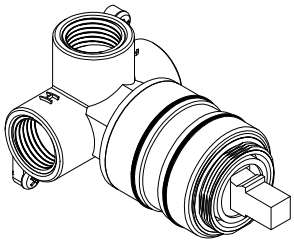

3. Sheeting and waterproof layer can now be applied.
*Ensure cutout in finish wall is 47mm diameter.

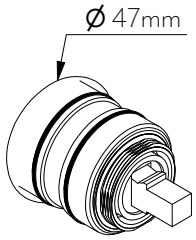

WHAT'S IN THE BOX

1. Body
2. Fixing screws
3. Cartridge
4. Locking nut

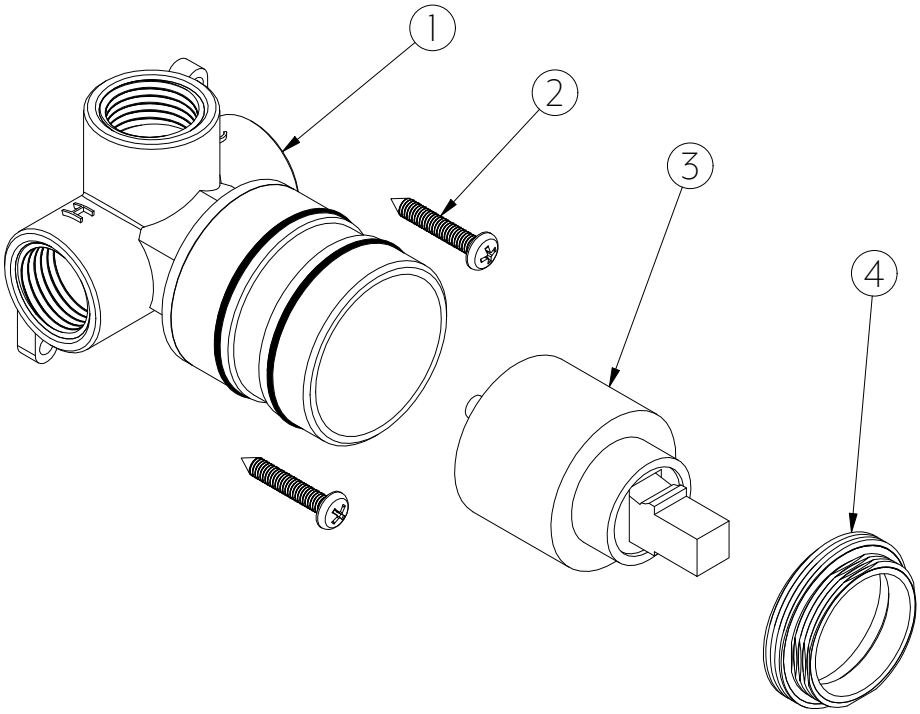

Regularly clean with mild liquid detergent or soap and water

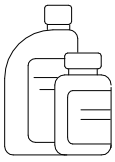

DO NOT use cream cleaners or bleach. These substances are abrasive

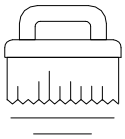

DO NOT use cleaning pads with abrasive surfaces as this may scratch the material